Order No : ?????			
Model:	CPDS142-A	Material:	100% Polyester
Body Color:	Full Color	Quantity:	00 PCS
Font Color:	Full Color	Size:	Adult
Attachment:	None		

1st side

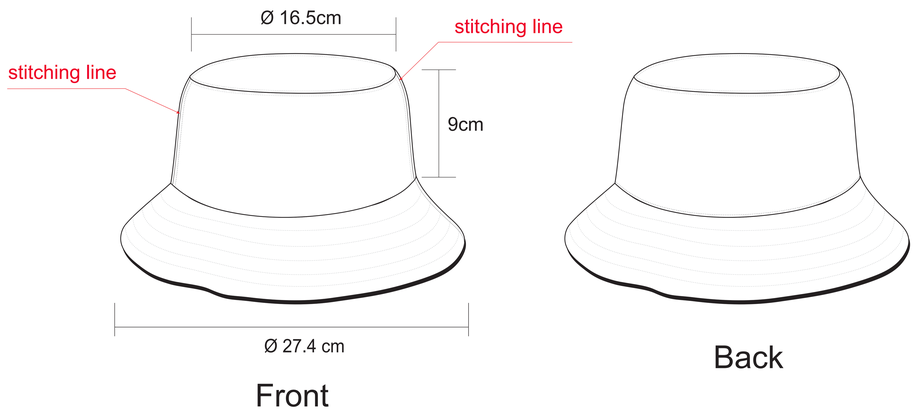

other side

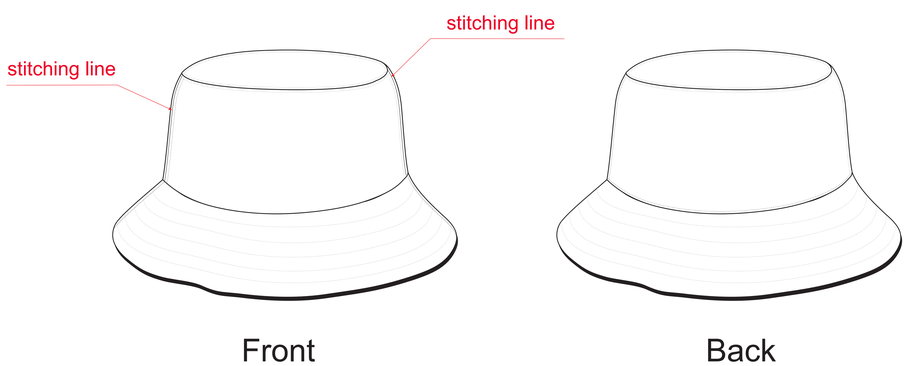

This is just for reference only

PLEASE NOTE:

1. Unless you have waived the artwork approval process, your order in ON HOLD until approved!
2. The actual printing / PMS match can slight differ in the final product with an acceptable vitiation.
3. Once approved, and product start we may not be able to make changes without incurring additional cost.
4. Size may acceptable ± 5 % tolerance.

1st side fabric

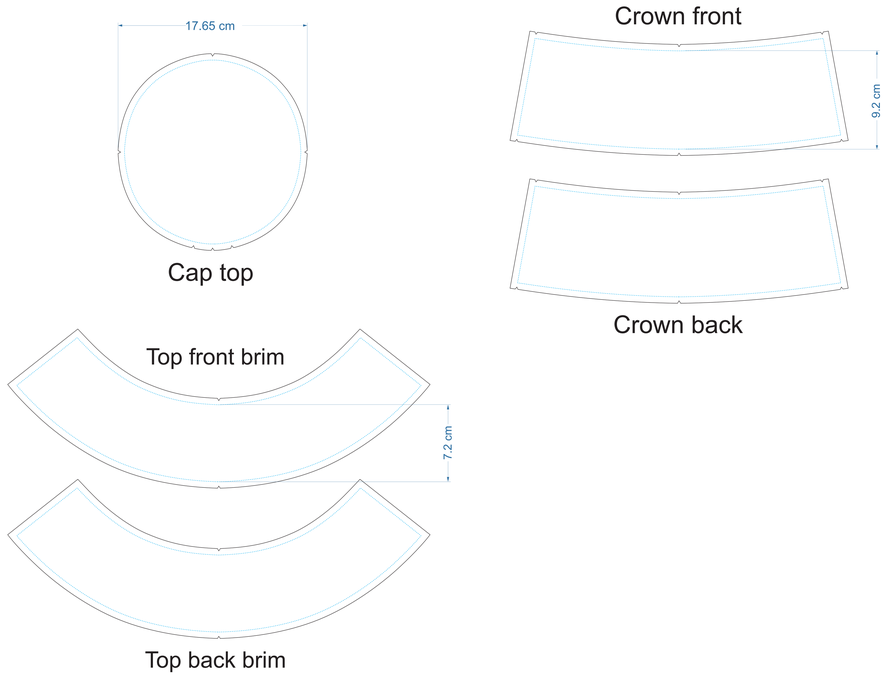
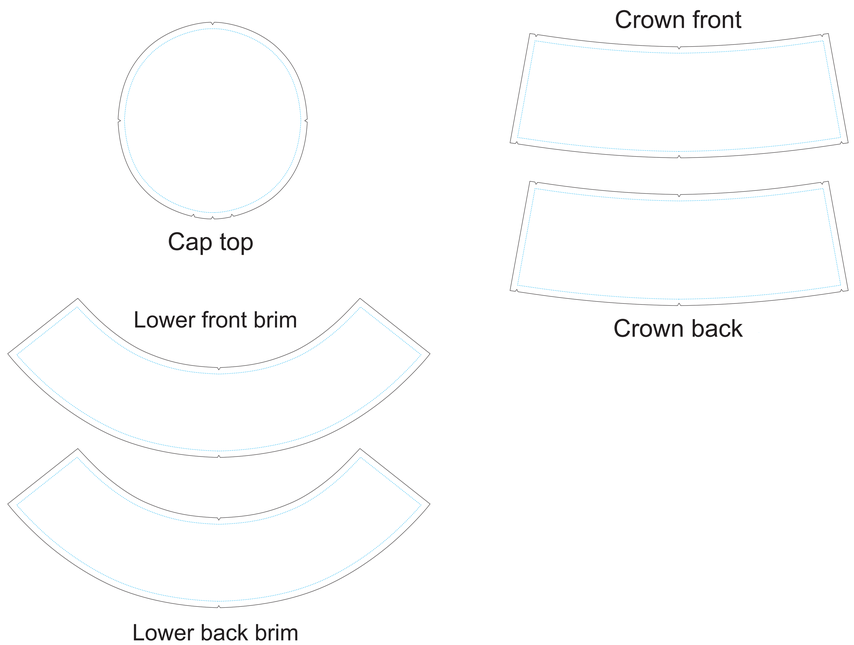
Other side fabric